REV. 8-1-12: MINOR EDITS TO GENERAL NOTES.

REV. 3-16-17: CORRECTED PAY ITEM NO. 805-01.69.

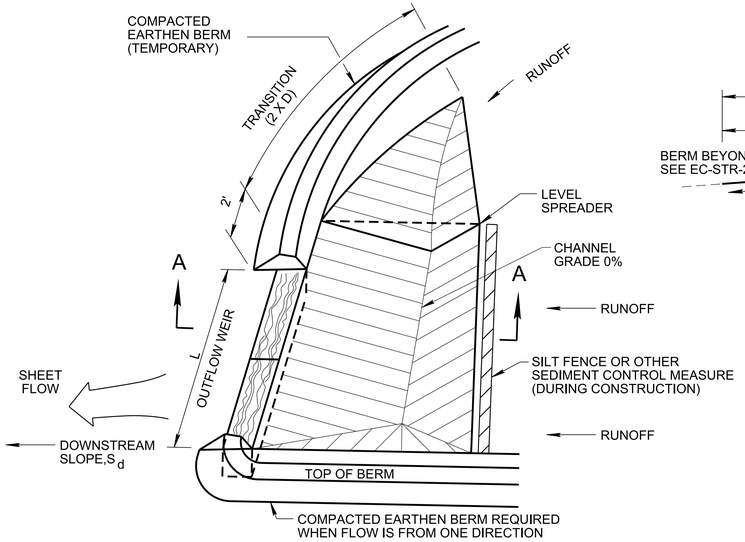

NOTE: ALL TEMPORARY BERMS, SWALES AND LEVEL SPREADER DITCH MUST RECEIVE TEMPORARY SEEDING IMMEDIATELY AFTER INSTALLATION

PERSPECTIVE VIEW

(APPLICATION WITH TEMPORARY BERM)

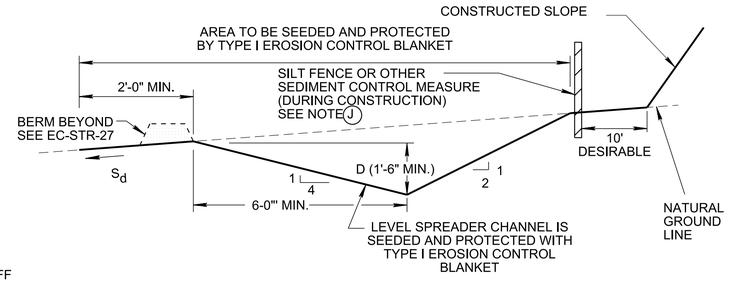

SECTION A - A
TYPE 1 WEIR

(TEMPORARY APPLICATION)

MINIMUM LEVEL SPREADER CHANNEL DEPTH "D" IN FEET

DESIGN DISCHARGE Q (cfs)	DOWNSTREAM SLOPE, S_d IN PERCENT (%)			
	0%-4%	4%-6%	6%-8%	8%-10%
1	1.5	1.5	1.5	1.5
2	1.5	1.5	1.7	2.0
4	1.5	1.8	2.5	3.0
7	1.9	2.5	3.5	4.1
10	2.3	3.1	4.2	*
15	3.0	3.9	*	*
20	3.5	4.5	*	*
25	3.9	5.2	*	*
30	4.3	5.7	*	*
35	4.7	6.2	*	*
40	5.1	6.7	*	*
45	5.5	*	*	*
50	5.8	*	*	*

* = NOT RECOMMENDED

UNIT WEIR FLOW RATES IN CFS/LF

DOWNSTREAM SLOPE, S_d IN PERCENT (%)			
0%-4%	4%-6%	6%-8%	8%-10%
0.49	0.20	0.07	0.04

WEIR LENGTH "L" = DESIGN Q IN CFS DIVIDED BY UNIT WEIR FLOW IN CFS/LF

MINIMUM WEIR LENGTH = 4 FEET

WEIR LENGTH > 200 FEET IS NOT RECOMMENDED

EXAMPLE: DESIGN Q = 7 cfs
S_d = 6%

THUS, L = 7/0.20 = 35 FEET
D = 2.5 FEET

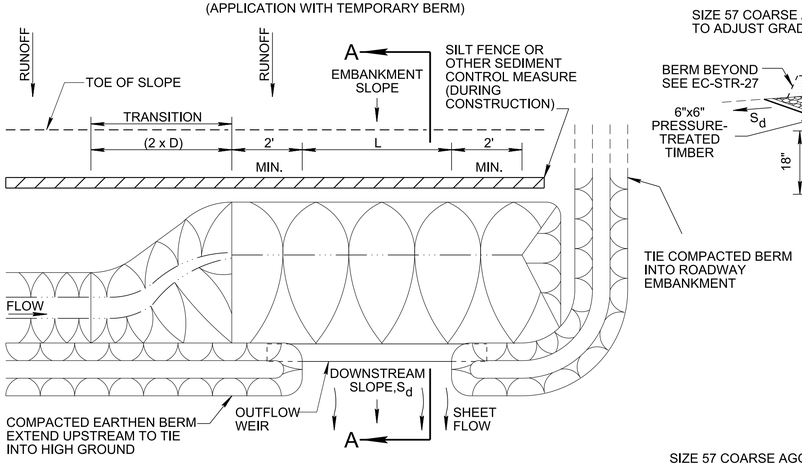

PLAN VIEW

(APPLICATION WITH SIDE DITCH FROM ONE DIRECTION)

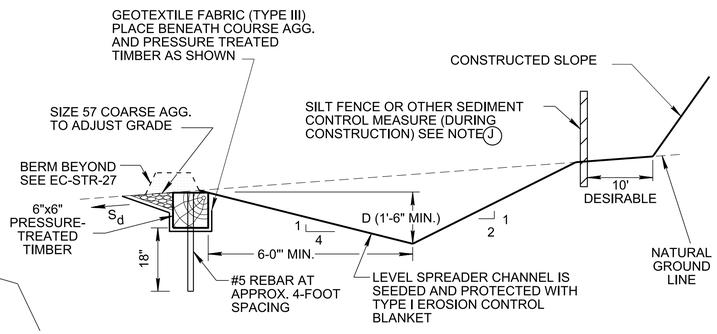

SECTION A - A
TYPE 2 WEIR

(TEMPORARY APPLICATION)

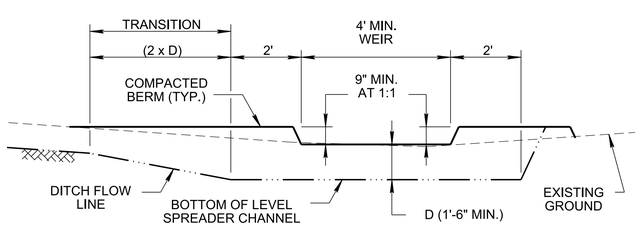

PROFILE VIEW (HORIZONTAL)

(APPLICATION WITH SIDE DITCH FROM ONE DIRECTION)

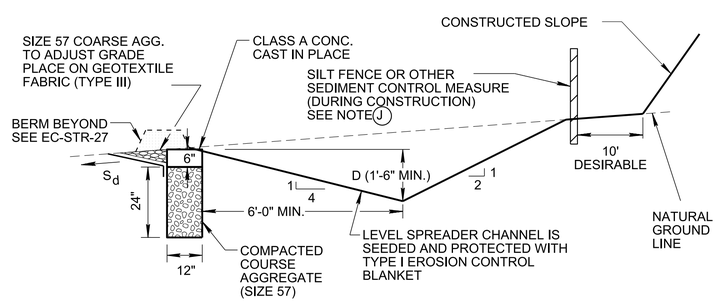

SECTION A - A
TYPE 3 WEIR

(PERMANENT APPLICATION)

LEVEL SPREADER GENERAL NOTES

(A) LEVEL SPREADERS INCLUDE A LEVEL CHANNEL AND WEIR WHICH RECEIVE CONCENTRATED INFLOW AND RELEASE IT IN A SHEET FLOW CONDITION. THEY CAN BE USED ON A TEMPORARY BASIS IN COMBINATION WITH TEMPORARY EPSC MEASURES OR ON A PERMANENT BASIS WITH SIDE DITCHES OR OTHER STORM WATER CONVEYANCES. LEVEL SPREADERS MAY ACCEPT CONCENTRATED INFLOWS FROM ONE OR BOTH ENDS.

(B) LEVEL SPREADERS MAY BE USED WHERE THE SLOPE DOWNSTREAM OF THE WEIR Sd IS UNIFORM AND IS AT A GRADE OF 10% OR LESS. UNDER IDEAL CONDITIONS, A UNIT SHEET FLOW RATE OF 0.49 CFS/LF CAN BE ALLOWED ON DOWNSTREAM SLOPES UP TO 4% HOWEVER, WHERE DOWNSTREAM VEGETATION IS SPARSE OR Sd EXCEEDS 4%, THE WEIR LENGTH SHOULD BE INCREASED AS INDICATED BY THE TABLE OF UNIT WEIR FLOW RATES.

(C) THE WEIR AND CHANNEL MUST BE LEVEL TO WITHIN 1/8 INCH PER 10 LF OF WEIR, AND THUS MUST BE INSTALLED ALONG THE CONTOUR OF THE SLOPE. NON-LINEAR HORIZONTAL ALIGNMENTS (CURVED WEIRS) ARE PERMISSIBLE.

(D) IN GENERAL, LEVEL SPREADERS FOR TEMPORARY USE SHALL BE DESIGNED FOR THE 2-YEAR STORM EVENT. AT LOCATIONS WHICH DRAIN TO EXCEPTIONAL TENNESSEE WATERS OR SEDIMENT-IMPAIRED STREAMS, TEMPORARY LEVEL SPREADERS SHALL BE DESIGNED FOR THE 5-YEAR EVENT. LEVEL SPREADERS FOR PERMANENT USE SHALL BE DESIGNED FOR THE 10-YEAR STORM EVENT.

(E) WEIR LENGTH SHALL BE DETERMINED ON THE BASIS OF THE ALLOWABLE DISCHARGE PER FOOT OF WEIR LENGTH, AS PROVIDED IN THE TABLE "UNIT WEIR FLOW RATES." THE WEIR LENGTH SHALL BE DETERMINED BY DIVIDING THE DESIGN DISCHARGE BY THE ALLOWABLE UNIT FLOW RATE. THE MINIMUM WEIR LENGTH SHALL BE 4 FEET. WEIR LENGTHS GREATER THAN 200 FEET ARE NOT RECOMMENDED.

(F) TYPE 3 WEIRS SHALL BE CONSIDERED FOR PERMANENT USE AND SHALL BE CONSTRUCTED OF CAST -IN-PLACE CONCRETE. TYPE 2 AND 3 WEIRS SHALL BE FOR TEMPORARY USE. A TYPE 2 WEIR SHALL BE CONSTRUCTED WITH 6"X6" PRESSURE-TREATED TIMBERS. A TYPE 1 WEIR CONSTRUCTED FROM GRADED EARTH AND EROSION CONTROL BLANKET MAY BE USED FOR WEIR LENGTHS OF 10 FEET OR LESS.

(G) WHEN LEVEL SPREADERS ARE USED IN CONJUNCTION WITH A ROADWAY SIDE DITCH, A COMPACTED BERM SHALL BE PROVIDED ON THE SIDE OF THE DITCH IN ORDER TO ENSURE THAT OUTFLOWS OCCUR OVER THE WEIR. THE MINIMUM HEIGHT OF THE BERM SHALL BE 6 INCHES AND IT SHALL BE EXTENDED UPSTREAM TO A POINT WHERE THE EXISTING GROUND IS SUFFICIENTLY HIGH TO INTERCEPT THE TOP OF THE BERM.

(H) WHEN LEVEL SPREADERS RECEIVE FLOWS FROM ONE END, THE OPPOSITE END OF THE STRUCTURE SHALL BE PROVIDED WITH A COMPACTED BERM A MINIMUM OF 9 INCHES HIGH IN ORDER TO PREVENT OVERFLOWS. (SEE EC-STR-27)

(I) PERMANENT INSTALLATIONS SHALL BE MARKED WITH DELINEATOR POSTS IN ORDER TO IMPROVE SAFETY FOR MAINTENANCE DIVISION MOWING CREWS.

(J) LEVEL SPREADERS ARE NOT SEDIMENT CONTROL DEVICES. DURING CONSTRUCTION, THE BACK SLOPE SHOULD BE PROVIDED WITH SILT FENCE OR OTHER SUITABLE SEDIMENT CONTROL MEASURES. THESE SEDIMENT CONTROL DEVICES SHALL BE INSTALLED ACCORDING TO THE APPLICABLE STANDARD DRAWINGS.

(K) GEOTEXTILE FABRIC (TYPE III) SHALL MEET REQUIREMENTS OF THE STANDARD SPECIFICATIONS FOR GEOTEXTILES AASHTO DESIGNATION M-288, EROSION CONTROL.

(L) LEVEL SPREADERS SHALL BE PAID FOR UNDER THE FOLLOWING ITEM NUMBER:
805-01.69 LEVEL SPREADERS PER EACH. PAYMENT SHALL INCLUDE ALL MATERIALS AND LABOR NECESSARY FOR THE CONSTRUCTION AND MAINTENANCE OF THE LEVEL SPREADERS.

(M) THE DESIGN LIFE FOR A TEMPORARY INSTALLATION IS CONSIDERED TO BE ONE YEAR. INSPECT AFTER SIGNIFICANT RUNOFF EVENTS TO ENSURE THAT THE WEIR IS FREE OF DEBRIS. IMMEDIATELY REMOVE ANY SEDIMENT WHICH HAS COLLECTED IN THE LEVEL SPREADER CHANNEL. IF IN PLACE DURING THE WINTER MONTHS, INSPECT AFTER EACH FREEZE/THAW CYCLE TO ENSURE THAT THE WEIR IS STILL LEVEL.

EROSION CONTROL PLAN LEGEND:

LEVEL SPREADER (DUAL DIRECTION) LS

LEVEL SPREADER (SINGLE DIRECTION) LS

MINOR REVISION -- FHWA APPROVAL NOT REQUIRED.

NOT TO SCALE

STATE OF TENNESSEE
DEPARTMENT OF TRANSPORTATION

LEVEL SPREADERS

2-1-08 EC-STR-61

29-JUN-2017 14:38
\\AG03SDCWF00008.net.ads.state.tn.us\13SHARED\StandDraw\Working Folder For Eugene\backup d\pak on Jj96208\WORKSTD\2017 std dwg\ECSTR61-20170316.dgn